ISBN 978-81-934174-2-3
6th International Conference on Engineering, Science, Technology and Industrial Applications (ESTIA-2017)
Istanbul (Turkey) Sept. 8-10, 2017

Solar Energy-Based Combıned Coolıng and Heatıng System Desıgn and Prototype Productıon

O.IPEK[2] and S. Alomari[1]

[1]Department of Mechanical Engineering, Engineering Faculty, Suleyman Demirel University, Isparta - Turkey

***Abstract*:** *Solar energy has lots of application areas. Especially because of depletion of fossil energy Sources, the usage of alternative energy sources such as solar energy, gained more importance. Absorption cooling and heating system is one of the most important solar energy applications. Especially, if the system is going to be used both for heating (in winter) and cooling (in summer), is to be rather economic. Absorption systems are used for cooling and heating with solar energy. In absorption systems thermal energy obtained from various energy sources, can be used directly to generate cooling effect. Absorption cooling and heating systems are more economical and Inexpensive than vapour compression systems, since in the previous one heat energy is used rather than electrical.The present work includes design, construction and operation of a prototype solar absorption cooling and heating system, using ammonia-water as a refrigerant to avoid any refrigerant that cause global warming and greenhouse effect. In this system an electric generator is replace by evacuated solar collector for heating the refrigerant called ammonia-water. During this study an atmospheric temperature, fluid temperature at the collector, temperature of the evaporator, and the temperature of the room were measured to find the COP of the system. More than 80 runs were carried out the system from August 2016 to April 2017, the main results were taken between the period of August 2016 for cooling system and in March 2017 for heating system to find the maximum COP, cooling, heating, temperature and pressure of the system.*

Keywords: *Solar Energy, Absorption System, Solar Collector, Ammonia-Water Refrigerant*

1. Introduction

Proving the suitable energy from principal factors is considered important to improve social and political goals to any country in the world. The essential in providing necessary new resources of energy so it could upgrade the level of any goals of civilization taking in consideration the increasing number of population and the industrial development which is clearly witnessed in this century and it results of reducing the resources already available by proving traditional energy resources[1]. This had enquired from the scientist and researchers who were involved in energy studies to find new methods and techniques that could provide human a better use of new energy resources. The energy of the sun is considered one of these resources that we can count on as a substitute resources to any traditional energy using a special system which can transfer the energy provided from the sun in filed and get hot water for domestic purposes. Also for cooling unties system used in factories and housing compounds its benefits will lead us in conserving the use of traditional resources already being used and in danger of being reduced plus protecting nature by using resources may cause pollution.[2] mankind knew the importance of the sun long time ago and used it for heating and cooling that done his best to empower it. The scientists and researchers took this point and lounged ideas for solar system which led it results to create the absorb system which is used now in a lot of applications like heating/cooling services, inside large industrial,

hospitals and office buildings places. The heating/cooling can be transferred by radiation, conversion, or conduction.

The absorber system for cooling and heating is considered now a perfect substitute for the traditional system already used by mankind. We can witness its privilege for less consumption for electricity and doesn't contain a mechanical press but uses a absorb on providing the absorbing system with necessary heating energy so it will be albeit in generating the necessary stem to start the system. This make it less noisy plus its potential development can enlarge to high capacity reaches to 1000 ton which can cool and heat large places [3]. The mechanism of refrigeration absorption was discovered in 1824 by Faraday, who obtained cooling by vaporizing liquid ammonia and absorbing the vapor on silver chloride in a closed system.

The first absorption system was developed by Ferdinand care in 1860; the need for refrigeration had become acute, since the supply of natural ice from the north had been cut off during the American civil war. This was the first operated absorption system. In the absorption cooling and heating system we used the solar energy as a source instead the electric energy that used in the vapour compression refrigeration system [5]. In the system of absorption cooling and heating two working fluid are used absorbent combinations. Among the most applied working fluid are the pair ammonia water absorbent (NH3 – H2O) and water lithium bromide absorbent (H2O-LiBr). The pair (H2O- LiBr) is very difficult to operating less than zero °C, so it is very useful to air conditions [4].

2. Experimental Set-up and Measurement Procedure

The solar-powered absorption cycle consists of four major parts, a generator, a condenser, an evaporator and an absorber. These major components are divided into three parts by one heat exchanger, two expansion valves and a pump. Schematic diagrams of the solar-powered cooling system are shown in Figures 1.

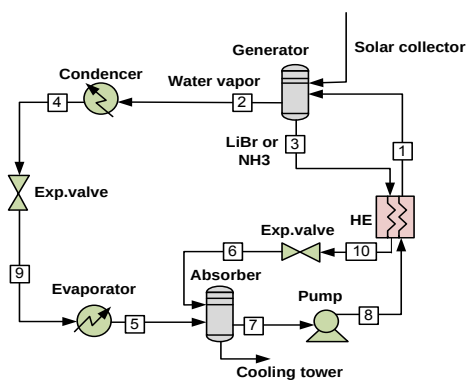

Fig.1: Schematic diagram of the absorption cooling system

For cooling system the Evacuated-tube collector receives energy from sunlight and heat is accumulated in the storage tank. Subsequently, the energy is transferred through the high temperature energy storage tank to the absorption system. The solar collector heat is used to separate the water vapour, stream number 2, from ammonia solution (NH3), stream number 3, in the generator at high temperature and pressure resulting in ammonia solution concentration. Then, the water vapour passes to the condenser where heat is removed and the vapour cools down to form a liquid, stream number 4. The liquid water at high pressure, stream number 4, is passed through the expansion valve, stream number 9, to the evaporator, where it gets evaporated at low pressure, thereby providing cooling to the space to be cooled. Subsequently, the water vapour, stream number 5, goes from the evaporator to the absorber. Meanwhile, the strong solution, stream number 3, leaving the generator for the absorber passes through a heat exchanger in order to preheat the weak. As shown in figure 1. [15]

For the heating system in the second part of fabrication the evacuated-tube collector receives energy from sunlight and heat is accumulated in the storage tank. Subsequently, the energy is transferred through the high temperature energy storage tank to the system. After the water temperature reach to 35^0 C, the hot water move from the solar collector inters to radiator (thermal radiator). We put fan before the radiator to push the hot air to room. Than the radiator provide heating to the space to be hooted. As shown in figure 2.

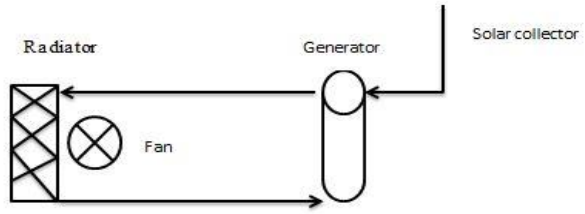

Fig. 2: Schematic diagram of the absorption heating system

Fig. 3: Solar absorption cooling and heating system.

2.1 Analysis

In most of the solar system, energy gain from the solar collector is a very important parameter in analyzing the performance. The useful energy gain of collector surface area (power) was given by:

$$Q_u = \dot{m}\, Cp(T_{out} - T_{in}) \quad (1)$$

Where Q_u is the mass flow rate of the fluid, CP is specific heat at constant pressure, T_{out} is the fluid temperature after flowing out the solar collector, T_{in} is the fluid temperature before flowing in the solar collector. The collector efficiency was a very important parameter that used to analysis the performance of the solar collector. The efficiency of the solar collector is:

$$\eta = \frac{Q_u}{A_C I} \quad (2)$$

Where Q_u is calculated from the equation (1), η is the collector efficiency, Ac is the collector area and I is the instantaneous solar radiation incident on the collector per unit area. The evaporator heat absorption is given by equation

$$Q_e = \dot{m}_r\, \Delta H_e \quad (3)$$

Where Q_e the mass flow is rate of the refrigerant and ΔH_e is the enthalpy changes of the refrigerant when passing the evaporator. The Solar Fraction (SF) is also a very important parameter in measuring the solar energy performance. It is defined as total energy provided by solar system over the total amount of energy required for the whole system. The SF cab is calculated by:

$$SF = \frac{Q_u - Q_s}{Q_e} \quad (4)$$

Where Q_u is given in equation (1), Q_s is the heat loss of the tank and Q_e is given in equation (3). The coefficient of performance of the cooling and heating/refrigerator (COP_R) system is given in the equation:

$$COP_R = \frac{q_l}{W_{IN}} \tag{5}$$

Where $q_l$the heat is produced to form the cooling effect and W_{IN} is the total work input to the system.

3. Results and Discussion

The cooling and heating can be done by using solar energy. the air conditioning system has been produced without converting directly from solar energy to electricity and it has attracted considerable attention to the efficiency of 85%. The biggest difference of this system is that the sun directly utilizes the heating and cooling power instead of producing electricity with solar panels. Here, the heated water is used in cooling and heating by taking the energy with 85% efficiency with the thermal change system. The system naturally provides cooling and heating the house at the same time.

We took the reading and we find the results was good to provide heat and cool air to room or office. The dimension of the room or office was (2.5m*3m*3m) and After the total assembly and calcution were complete the setup was tasted. The testing was performed from 9 am to 4 pm and the reading was noted.From the testing done it was noted that room temperture it became 23 °C for cooling system and 31 °C for the heating system. the result was noted that the collecter fluid temperatur increased with time The generater temperature became 89 °C in the summer for cooling system and 70 °C in the winter for heating system.The C.O.P of the system was obtained from the calculation as 4.021 for the cooling system and 3.087 for the heating system.

4. Conclusion

In this study the absorption cooling and heating system using the Evacuated-tube collectors was sucessfully fabricated.from the study it is observed that the rsults are up to expected level and the hence the same system can be the best method than the conventional system.in the future it is decided to compare the performance between the absorption cooling and heating system and vapour compression refrigeration system using evacuated-tube collectors.

5. Acknowledgements

The authors gratefully acknowledge for mechanical engineering faculty of suleyman demirel University for the construction of the laboratory to take data for this study.

6. References

[1] Bonus, A., 2001.Solar hot water\home power magazine. Date: 23\2\2017. Www.solarhost.com

[2] Umberto, D., Stefania, P., Paolo, S., 2009.Solar-powered cooling system: Technical and economic analysis on industrial refrigeration and air-condition application. Elsevier\Applied energy, vol86, issue9.

[3] Levy, A., Kosloff, R., 2012. Quantum absorption refrigeration. Date 24\2\2017 www.en.wikipedia.org.

[4] Ajay, S., Dr.Sankar, S., 2015.Design and performance analysis of a solar thermal assisted vapour absorption air conditioning system. Ijirset, vol.4, issue.5, April\2015.

[5] Denny, J., 2015.Vapour absorption refrigeration system. Date 24\2\2017

[6] Jasim, M.A., Kamrauzzman, S., Alghoul, M.A., Mohd, Y.S., Azami, Z., Ibrahim, A., 2008. Solar absorption refrigerant system using new working fluid pairs, www.researchgate.net Date 5\3\2017.