ISBN 978-81-934174-2-3
6th International Conference on Engineering, Science, Technology and Industrial Applications (ESTIA-2017)
Istanbul (Turkey) Sept. 8-10, 2017

Design and Application of Heating System by Using Ground - Source Heat Pump for Isparta-Turkey Climate Conditions

O. Ipek[2] , M.Alkhalidi[1] and B. Gurel[1]

[1]Department of Mechanical Engineering, Engineering Faculty, Suleyman Demirel University, Isparta - Turkey

***Abstract*:** *The objective of this experiment has been carried out to study the effects of the parameters such as different mixing ratio of (water-ethylene glycol) mixture with multiple volumetric flow rates for each mixing ratio of (water - ethylene glycol) mixture on the temperatures of the room and COP of ground-source heat pump (GSHP) system when they used for heating room experimentally. The GSHP system carried out in room with 3x3x3 dimensions in Suleyman Demirel University in Isparta – Turkey. The horizontal ground heat exchanger (HGHE) in the trenches of 3 m depths and the pipe of the horizontal ground heat exchanger they used in the experiment from chrome nickel this pipe have 30 m length and diameter 0.0254m. The experimental results were obtained in April and May in heating season of 2017. According to the experimental results, the best results are obtained at 20 L/ min volumetric flow rate of the mixture, mixing ratio containing 10% ethylene glycol and the COP is 3.95.*

Keywords: *Ground-Source heat pump; horizontal heat exchanger;*

1. Introduction

Due to the increased population and technological developments the energy consumption increased , the search for new energy sources has accelerated, as a result, the importance of alternative energy sources has increased .the benefit from alternative energy types such as, wave energy, wind energy, solar energy, geothermal energy began to benefit from this alternative energies. In the heat pump system, water, air, sun and earth are used as energy source. In this context, ground source has gained an important usage potential as an alternative energy source for heat pump system [1]. Granryd [2] investigated the effects of the flow rate of the external refrigerant on the evaporator and condenser side. The main objective of this work was to identify simple analytical equations that could be used to assess the optimum flow rate. There are more various study on the ground source heat pump and the hybrid of ground source with the sun that been very interested recently [3-6]. The experimental set-up of this study , described in the next section, is constructed and tested for the first time on the basis of an academic study performed in Isparta, Turkey . The experimental set-up of this study , described in the next section is constructed and tested for the first time on the basis of an academic study performed in Isparta, Turkey . The COP of the GSHP system is determined from the experimental measurements.

The influences of various system parameters such as the mixing ratio of (water - ethylene glycol) mixture with multiple volumetric flow rates for each mixing ratio on the temperatures of the room and COP of ground-source heat pump (GSHP) system are examined. from this experment study where significant variables are identified.

Nomenclature

COP : cofficient of performance

c_p: Specific heat of (water + ethylene glycol) mixture (kJ/kg K)

GSHP: ground source heat pump

g: Gravity (m/s^2)

H: Head of (water + ethylene glycol) mixture (m)

h_1: Inlet enthalpy to the compressor (kJ/kg)

h_2: Outlet enthalpy from the compressor (kJ/kg K)

h_3 : : Outlet enthalpy from the condenser (kJ/kg K)

HGHE: horizontal ground heat exchanger

I_F: Current of condenser fan (A)

$\dot{m}_w$: Mass flow rate of (water + ethylene glycol) mixture (kg/s)

$\dot{m}_w$: Mass flow rate of (water + ethylene glycol) mixture (kg/s)

$\dot{m}_R$: Mass flow rate of refrigerant (kg/s)

$\dot{Q}_C$: Capacity of condenser (kW)

$\dot{Q}_e$: Extracted heat rate from earth (kW)

T_5: Inlet temperature of (water + ethylene glycol) mixture (^{O}C)

T_6: Outlet temperature of (water + ethylene glycol) mixture (^{O}C)

V_F: Voltage of condenser fan (V)

$\dot{W}_C$: Work of the compressor (kW)

$\dot{W}_P$: Work of the pump (kW)

$\dot{W}_F$: Power of the fan (kW)

ρ: Density of (water + ethylene glycol) mixture (kg/m^3)

$\cos\phi$: Power factor

2. Material and Method

A schematic view of the constructed ground source heat pump (GSHP) system is shown in Fig. 1. The presented system was installed Isparta-Turkey. This system mainly consists of two separate circuits: (a) the horizontal ground heat exchanger circuit consisting of a horizontal heat exchanger (HGHE) from chrome nickel with a diameter of 0.0254m and pipe length was 30 m and the pipe buried in 3 m depths and pump (b) heat pump circuit.

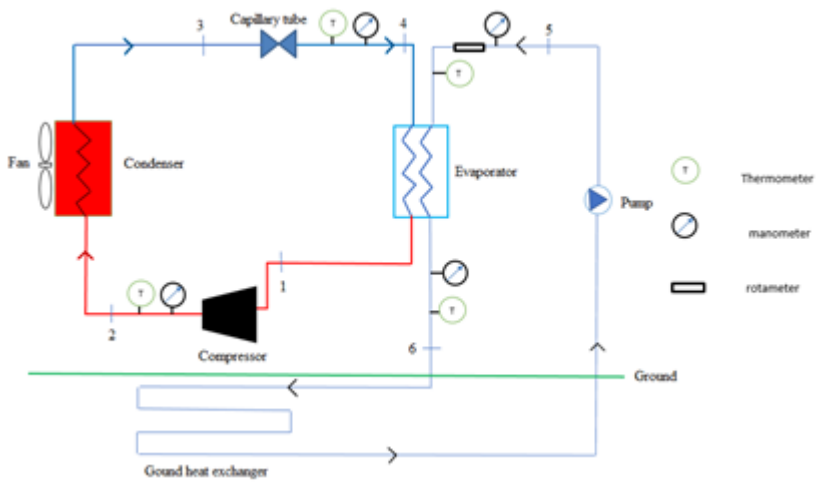

Fig. 1. Schematic view of the constructed GSHP system

To avoid the freezing of the water under the working conditions in the winter the non-toxic ethylene glycol solution was prepared to this experimental. The Heat pump circuit was constructed on the closed-loop copper tubing and the working fluid is R-22. The GSHP system can be used for both heating and cooling. In the winter, the mixture of (water - ethylene glycol) are circulated in the pipes of HGHE by using the pump and extract the heat from the ground and carries it into the room. In summer, the system reverses and takes heat from the room and stores it in the ground. The (water - ethylene glycol) mixture transfer the extracted heat to refrigerant in the evaporator. The refrigerant which flows through the heat pump circuit. The refrigerant evaporates by absorbing heat from the circulated (water - ethylene glycol) mixture through the evaporator and then enters the rotary compressor. The refrigerant is compressed by the compressor and then enters the condenser, where it condenses. After the refrigerant leaves the condenser, the capillary tube provides almost 10 C superheat that essentially gives a safety margin to reduce the risk of liquid droplets entering the compressor. The fan of the condenser are used to transfer the warmed air to the room. The volumetric flow rate of the circulated (water - ethylene glycol) mixture through the closed-loop of HGHE was measured by using a rotameter which controlled by a hand. The inlet and outlet temperatures of the R-22 in the condenser, compressor and evaporator were measured with digital thermometer. In addition, the inlet and outlet temperatures of the circulated (water - ethylene glycol) mixture through the closed-loop HGHE were measured with digital thermometers and temperature of the room also measured by digital thermometer. The inlet and outlet pressures of the compressor, evaporator and circulated (water - ethylene glycol) mixture were measured by using Bourdon type manometers.

3. Analysis

The performance of the GSHP is controlled by measuring the volumetric flow rate, the temperature of (water-ethylene glycol) mixture, and the temperatures of R22 at inlet and outlet of condenser, compressor and the electrical power input.

The extracted heat in heating mode is calculated by using the equation below:

$$\dot{Q}_e = \dot{m}_w c_p (T_5 - T_6) \tag{1}$$

The work of compressor , the capacity of condenser and the work of pump can be evaluated by used the equation (2), (3) and (4) respectively

$$\dot{W}_C = \dot{m}_R (h_2 - h_1) \tag{2}$$

$$\dot{Q}_C = \dot{m}_R (h_2 - h_3) \tag{3}$$

$$\dot{W}_P = \frac{\rho g H Q}{3.6x10^6} \tag{4}$$

The fan power can be evaluated by used the equation (5) is written as [7]

$$\dot{W}_F = I_F V_F \cos\phi \tag{5}$$

COP of the system can be evaluated by used the equation is written as

$$COP = \frac{\dot{Q}_C}{\dot{W}_C + \dot{W}_P + \dot{W}_F} \tag{6}$$

4. Result and Discussion

The experimental results were obtained in April and May in heating season of 2017. According to the experimental results, the best results of volumetric flow rate of the mixture was 20 L / min and mixing ratio containing 10% ethylene glycol and the COP is 3.95.

The experimental study of the ground source heat pump (GSHP) was obtained in room have dimensions of (3x3x3). Fig. 2, show the effect of the different mixing ratio of the (water and ethylene glycol) mixture with multiple volumetric flow rates for each mixing ratio on the temperature of the room (Troom). According to the obtained results, the maximum increase in Troom appears to occur in the mixing ratio containing 10% ethylene glycol and the mixture volumetric flow rate of 25 L / min and The minimum temperature of system at 10 L/ min.If the mixing ratio containing more than 20% ethylene glycol with the increasing of the volumetric flow rate of the mixture, the temperature of the room (Troom) decrease.

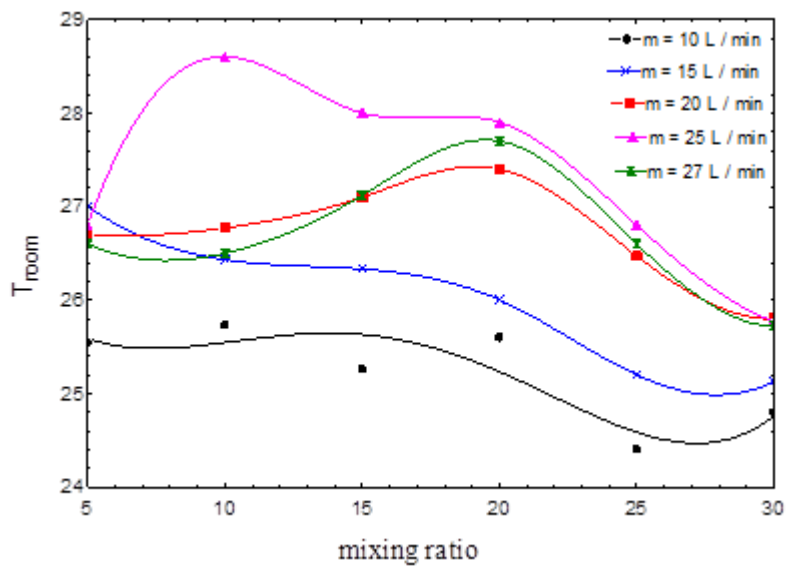

Fig 2. Effect of different mixing ratios on the temperature of the room

The experimental study of the ground source heat pump was obtained in a room have dimensions of (3x3x3). Fig. 3, show the effect of the different mixing ratio of the (water - ethylene glycol) mixture with multiple volumetric flow rates for each mixing ratio on COP of the system. The obtained results seen that the maximum increase in the COP value is found in the mixing ratio containing 10% ethylene glycol and volumetric flow rate of the mixture was 20 L / min. If the mixing ratio containing more than 10 % ethylene glycol with the increasing of the volumetric flow rate of the mixture, the COP of the system decrease.

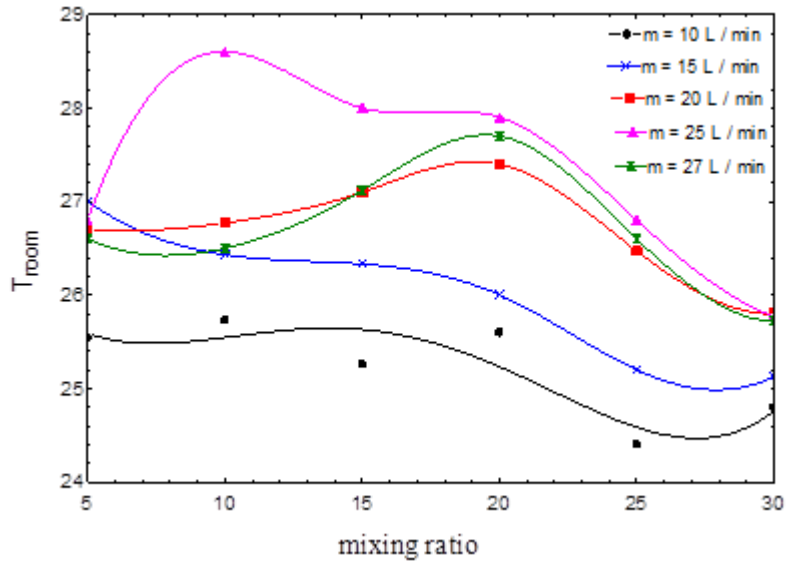

Fig 3. Effect of different mixing ratios on the COP of the system

5. Conculation

GSHP offers some advantages over conventional heating and cooling systems, especially in terms of efficiency, maintenance costs and overall operating costs. this experiment has been carried out to study the effects of the parameters such as different mixing ratio of (water - ethylene glycol) mixture with multiple volumetric flow rates for each mixing ratio of (water - ethylene glycol) on the temperatures of the room and COP of ground-source heat pump (GSHP) system when they used for heating room experimentally. GSHP installed in Isparta – Turkey. The following are the main conclusions to be drawn from this study,

- The relevant soil properties must be precisely measured before attempting the design of the HGHE. Therefore, care must be taken in the design and construction of a ground loop for a heat pump application to ensure long ground loop life and reduce the installation costs.
- In the stage of design of GSHP System, All parts of the system should be checked in terms of energy efficiency.therefore A pre-design analysis will be necessary to determine optimal system parameters that ensure minimum energy consumption and favorable costs.
- To maintain the system working at the high COP in countries have low ground temperature in heating season it's suggested to use hybird system with the solar energy (solar assisted ground source heat pump)

6. Acknowledgements

The authors gratefully acknowledge for mechanical engineering faculty of suleyman demirel University for the construction of the laboratory to take data for this study.

7. References

[1] E. Barbier, "Geothermal energy technology and current status: an overview," Renew Sustain Energy Rev, Vol.6, pp. 3–65, 2002.

https://doi.org/10.1016/S1364-0321(02)00002-3

[2] E. Granryd, " Analytical expressions for optimum flow rates in evaporators condensers of heat pumping systems, International Journal of Refrigeration, " Vol. 33, Issue 7, pp. 1211–1220, 2010.

https://doi.org/10.1016/j.ijrefrig.2010.05.009

[3] F. Karlsson, P. Fahlen, “Capacity-controlled ground source heat pumps in hydronic heating systems,” International Journal of Refrigeration, vol. 30, pp. 221-229, 2007.

https://doi.org/10.1016/j.ijrefrig.2006.08.008

[4] C.Montagud, JM .Corberán, Á. Montero, “In situ optimization methodology for the water circulation pumps frequency of ground source heat pump systems, ” Energy and Buildings , vol. 68, pp.42–53, 2014.

https://doi.org/10.1016/j.enbuild.2013.09.030

[5] K.C. Edwards, and D.P. Finn, “Generalized water flow rate control strategy for optimal part load operation of ground source heat pump systems,” applied energy, vol. 150, pp.50–60, 2015.

[6] Hénault B, Pasquier P, Kummert M. Financial optimization and design of hybrid ground-coupled heat pump systems. Applied Thermal Engineering vol. 93, pp,72–82,2016.

[7] E.J. David, R.J. Johnny, L.H. John, Electric Circuit Analysis, Prentice-Hall, New Jersey, 1992.