ISBN 978-81-934174-2-3
6th International Conference on Engineering, Science, Technology and Industrial Applications (ESTIA-2017)
Istanbul (Turkey), September 08-10, 2017

Design, Construction and Performance Evaluation of a Rice Par Boiler

Faruk Hammanadama Abubakar

Department of Agric and Bio-Resources Engineering Technology, Adamawa State Polytechnic, Yola Adamawa, Nigeria

***Abstract*:** *The project reports on the design, construction and performance evaluation of a rice par boiler. The rice parboiling machine is mainly used for parboiling paddy rice before milling. The machine is made up of cylinder housing with supporting stand having a diameter of 0.4m and a height of 0.4m with a capacity of 25kg (10 measures). The cylinder comprises of two compartments, the upper compartment which will contain water and paddy rice during soaking and the lower compartment which will contained only water which is used for steaming the soaked paddy rice. A 25kg (10 measures) of paddy rice was soaked at a temperature of 73° C for three and half (3.5) hours and steamed at 76° C for a(15) minutes by burning just 5kg of firewood at atmospheric pressure, and converting about 5liters of water in to steam. The paddy rice was dried to moisture content of 15%. The boiler efficiency was calculated to be 92% and 163.96KJ of energy (heat) was generated from burning the 5kg of firewood. The rice par boiler was constructed at the cost of USD186. There was little breakage of rice grain after milling when compared to traditionally parboiled rice. At the end of the construction, the rice par boiler was evaluated. Its recommends that a pressure gauge be incorporated at the steamer compartment and a thermostat to regulate a steady temperature.*

Keywords: *Rice, soaking, steaming, drying, par boiling, milling.*

1. Introduction

RICE (Oryza sativa) is a cereal crop, which is cultivated in swampy fields for human consumption. It come third to wheat in terms of carbohydrate content and stands as a principal food crop for over half of the world population. More than 8000 bonically different rice varieties are known, but by large, they fall in to two main groups. The ‘’Indica’’ varieties are mostly long grained and harder, while ‘’Japonica’’ varieties are shorted-grained and ales harder; this is a variety commonly found in African countries (Hawthorn A.M, 1981)

Today, rice has become one of the most important major food grains of the world. The paddy grain is a living matter and represents a colloidal capillary porous body. It’s contain large amount of macro capillaries which water can move out or inside the grain surface (K.M. Sahay, et’al, 2007).

The world leading rice producing countries are china, India, Indonesia, Bangladesh and Thailand. Total annual world productivity is more than half a million metric tons (Teri, 2001). Rice is processed by parboiling. Parboiling it is a pre-milling (optional) treatment to paddy prior to its milling to achieve maximum recovery of rice grain and to minimize breakage. Parboiling of rice was first developed in Asian countries to reduce the milling losses. In this process paddy is soaked, heated and dried. The paddy grain is mainly composed of polygonal starch granules. The voids or inter-granular spaces cause breakage during milling. This breakage may be reduced by gelatinizing the starch. During gelatinizing process, starch swells and fills the voids.

During soaking of paddy water penetrates in to starch granules are resulted in swelling of grains. In heating, the energy weakens the granule structure and more surfaces become available for water absorption and results in irreversible granules swelling. This phenomenon is called gelatinization of starch (K.M Sahay and K.K Singh,

2003). The temperature at which gelatinization take place is known as the gelatinization temperature and it is specific for particular variety of rice in a temperature of about 70° C. Parboiling of paddy is carried out in three steps: Soaking, Steaming, and Drying.

Theoretically, soaking of paddy can be done at or below its gelatinization temperature. The lower the temperature used for soaking, the more the process become slow, and vice versa. Soaking period can be reduce by subjecting the paddy to vacuum for few minutes before soaking and or soaking under high pressure of 70Kpa. Heat of gelatinization of starch is supplied by saturated steam. Parboiled paddy may be dried in the shade or in the sun or with hot air. Shade drying takes longer time but gives excellent milling qualities. Rapid drying in sun or with hot air causes higher breakage during milling. The most convenient way is to dry in to passes to a required conditions in the moisture range of 15-19% (wet bases) (K.M Sahay and K. K. Singh, 2003).

Rice processing is highly mechanized in developed countries. However, the high level of mechanization is yet to be achieved in the developing countries (especially in West African countries),traditional methods of processing rice is still predominant.

With the numerous problems associated with traditionally-based rice parboiling techniques, such as drastic loss in quality and quantity, excess heat effect, time consuming and poor-safety conscious of the methods makes the mechanized rice parboiling of paramount need. Though a mechanized rice parboiling machine have been developed, but due to high cost of the machine ,its subsequent maintenance and high tax on importation, traditional methods of parboiling rice is still predominant. The design, construction of a rice par boiler using firewood as a source of energy is necessary to reduce the burden and drudgery usually encountered.

The aim of this research is to design, construct and evaluate the performance of a rice par boiler. The key objectives of this work are to design, construct and evaluate the rice parboiling machine. The primary significance of this work is to solve the problems of rice damage during the processing of the rice products and also to give high quality of rice grain for convenient wholesome food and reduced drudgery and time. The secondary significance is its economic importance to farmers, there organization and the society at large. It will also encourage large scale producers and entrepreneurs. It is believe that whenever the design of the machine is successfully constructed, it will be available to the market at affordable price that a small scale can afford. Also, it will be maintained easily even by its operators and subsequently it replace the traditional method of parboiling.

2. Methodology

Materials used for the construction of the rice par boiler are mild carbon steel, Galvanized pipes, and angle iron. The choice of these materials was based on their unique properties that are adoptable to a particular component of the machine. Such properties include light weight, and malleability. The machine comprises the following: the cylinder, stands, bearings, screen disc, perforated steam pipes, discharge pipes with a valve, cylinder cover, and temperature gauge.

2.1. Cylinder Design

The cylinder serves as a container where the material (rice) will be put for parboiling and soaking process. A 2mm thick mild carbon sheet was roll to cylindrical shape of 0.4m diameter with 0.6m height. The cylinder having an internal diameter (di) and vertical height, h.

Circumference of cylinder $=\pi\, di$ …… (1)

Total surface area of the cylinder$=\pi\, r(r + 2h)$……. (2)

Volume of the cylinder$=\pi\, r^2 h$ …… (3)

The cylinder will be subjected to internal pressure due to steam generated inside and its walls are subjected to circumference or hoop stress and the longitudinal stress which may be assumed to be constant over the wall thickness.

The stress $\delta = \rho di/2ti$ ……. (4)

And longitudinal stress $\delta\iota = \rho di/4ti$…….. (5)

(Ryder, 1984)

Where ρ = the internal pressure

di = the internal diameter

ti = thickness of the cylinder.

2.2. Bottom Plate

The bottom plate was made by cutting a 2mm mild carbon sheet in to a circular shape having a diameter d, then the area of the bottom plate is ,

$A=\pi r^2$…….. (6)

2.3. Cover Plate

A 2mm mild carbon sheet was cut to a circular shape with disc grinder. The cover have two handle for easy opening and closing.

2.4. Screen

A screen serves as a barrier between the material (rice grain) and the water used for steaming. The screen was made from 2mm thick mild carbon sheet which was cut in to a circular shape. The screen was drilled with a 2mm drill bit round the screen disc.

2.5. Stand

This is to support the cylinder and its contents. This is made from 50mmx50mm angle iron.

3. Results and Discussion

3.1. Performance Evaluation

The rice was obtained from Yola Market, Yola South, Adamawa Nigeria. The rice parboiling machine (Figure 4.Shows the pictorial view of the machine. Figure 5. shows the exploded view of the machine, and Figure 6. shows the details of the machine.), after construction was tested with 25 kg (10 measures) of paddy rice and the following are the result observed.

1. Soaking process: paddy was soaked at 73° C temperatures inside a soaking cylinder for the period of three and half (3.5) hours to reduce the incidence of aflatoxin contamination during soaking. Separation of shaft and other foreign materials from the good paddy was made by floatation outside the cylinder before soaking process started

2. Steaming process: during steaming, the water in the upper part of the cylinder was discharged through the upper discharge valve. About five liters of water was remained in the lower part of the cylinder for steaming, the process lasted for 15 minutes at 76°C until the rice begins to split. The steaming water was then discharged through the lower valve, and finally the rice was discharged by tilting the cylinder using the two handle shaft for drying.

3. Drying process: After steaming, the steamed paddy rice was discharged for drying under shade and it took about 24hours to attained 15% moisture content by mass.

The paddy rice was taken for milling and the following are some of the improvements observed:

1. No bad odor was associated during and after the whole processes, due to the fact that the paddy rice did not ferment.

2. Less time during processing of the rice.

TABLE I shows the traditional par boiling techniques

Temperature (^{O} C)	30	50	60	65	65	70
Time (Hrs)	0	4	6	20	24	27

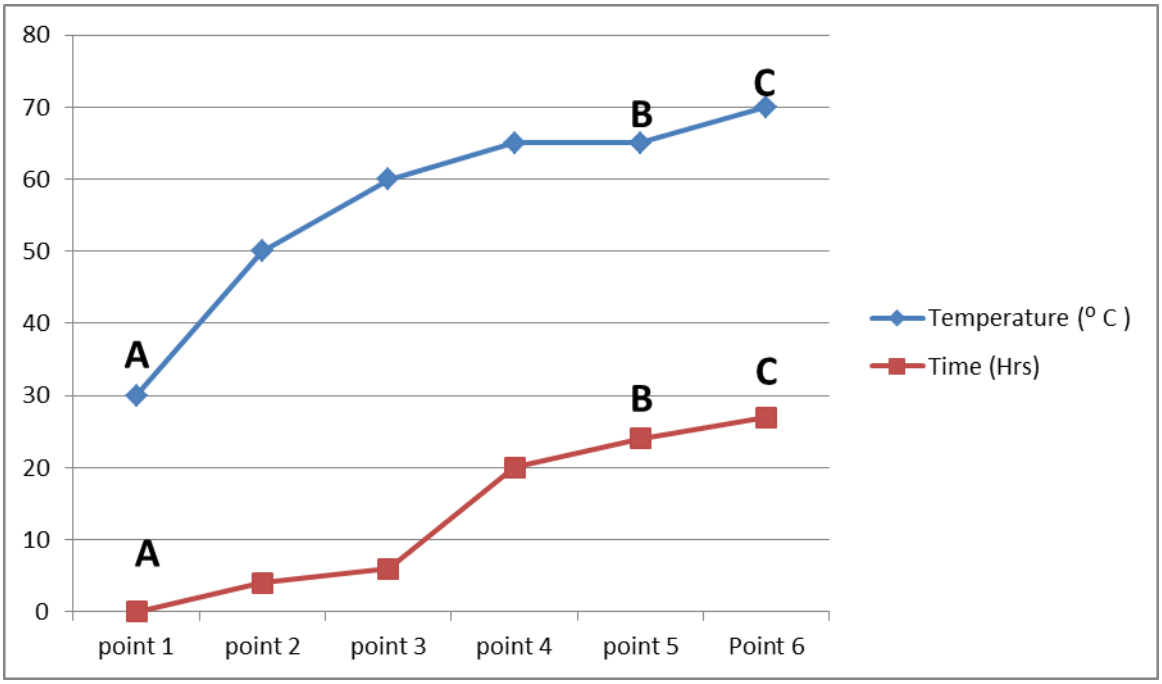

Fig.1: Illustrates traditional par boiling techniques.

From table 1.0 above shows that, it takes about 24 hrs to soaked the paddy rice (From point A to B on the graph) and steaming is about 3hrs to steamed the paddy rice (From point B to C).

TABLE II shows the constructed par boiler.

Temperature (^{O} C)	30	50	70	73	73	76
Time (Hrs)	0	0.2	0.3	0.7	3.5	3.75

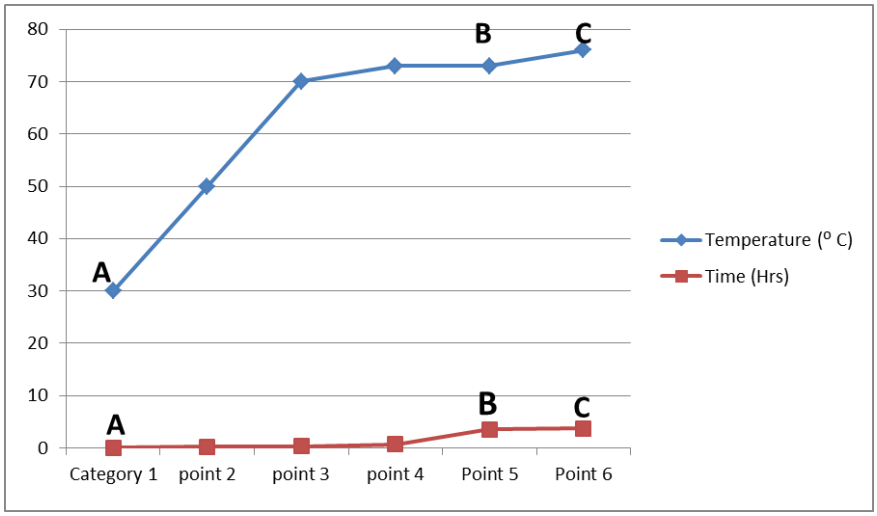

Fig. 2: Illustrates constructed par boiler.

From table 2.0 above shows that, it takes about 3.5hrs to soaked the paddy rice (From point A to B on the graph) and 15 about 15 minutes to steamed the paddy rice(From point B to C on the graph).

3. Less rice breakage of the rice grain after processing.

TABLE III shows the comparisons between the traditional par boiling techniques with the constructed par boiler after milling (13 kg) the par boiled paddy rice.

S/N	Methods	Weight of head rice (kg)	Weight of broken rice (kg)
1.0	Traditional Par Boiling Techniques	7.8	5.2
2.0	Constructed Par Boiler	11.96	1.04

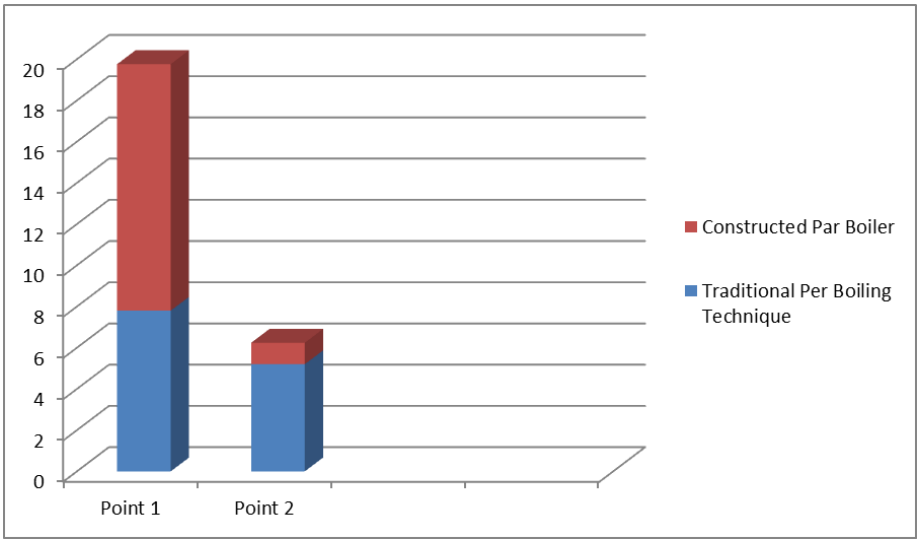

Fig.3: Bar-chart illustrate the rice par boiling efficiency (%)

From Table 3. above we can see that, the constructed par boiler can go up to 92% which is far better than the traditional rice par boiling techniques. This implies that, a constructed par boiler is suitable for both farmers and entrepreneurs.

4. High yield of rice grain was obtained.
5. Less loss of proteins and vitamins.

3.2. Cost of Construction

TABLE IV Cost of Construction of the rice par boiler

S/N	DESCRIPTION	QTY	PRICE	AMOUNT
1	Mild carbon metal sheet	2	12,000	24,000
2	Bearing	2	2,500	5,000
3	Temperature gauge	1	7,500	7,500
4	Iron rod (shaft)	2	500	1,000
5	Galvanized pipe	½ length	1,000	1,000
6	Angle iron 50mmx50mm	1 length	4,500	4,500
7	Gauge valve	2	400	800
8	Bolt and nuts	6	200	1,200
9	Pipe (handle)	½ length	1,000	1,000
10	Pipe (discharge pipe)	1 meter	500	500
11	Labor		5,000	5,000
12	Miscellaneous		3,000	3,000
13	Paints			4,000
	Totals			**58,500**

4. Conclusions and Future Work

A Rice parboiling machine have been produced which can soaked paddy rice for three and half (3.5) hours at 73° C and steamed at 76° C for 15 minutes.

From the performance evaluation of the machine we can deduce that, a good, productive, efficient, affordable and time effective milled rice grains can be obtained from this research work.

A pressure gauge should be incorporated at the steaming compartment and a thermostat to regulate a steady temperature of the contents.

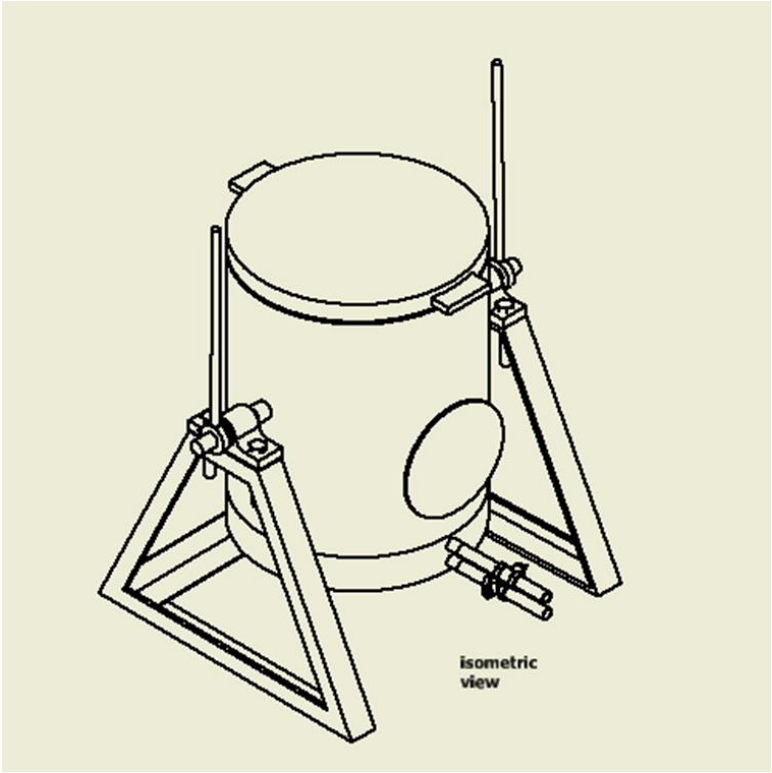

Fig. 4: An Isometric Projection of the constructed par boiler.

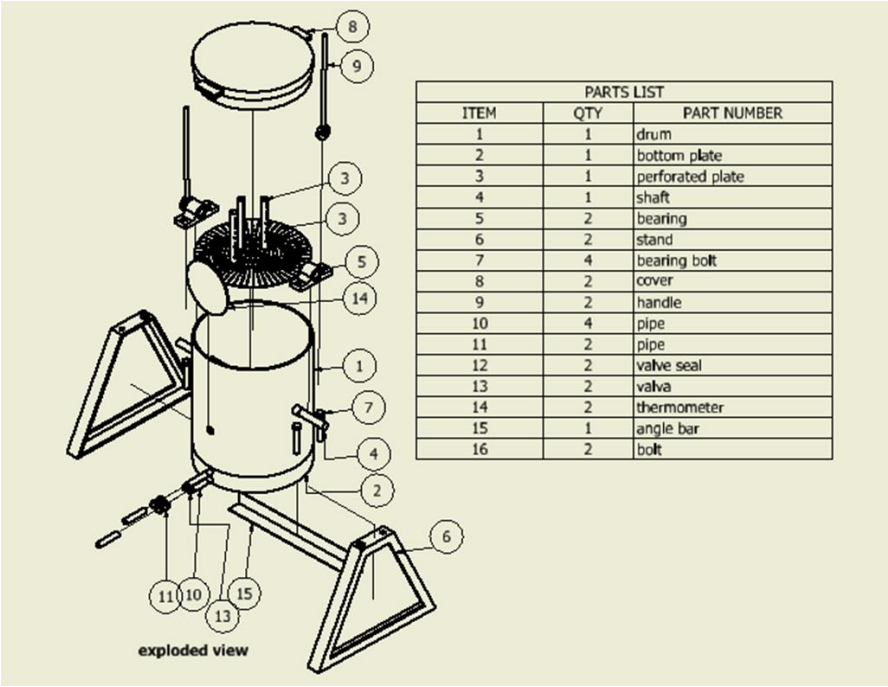

PARTS LIST		
ITEM	QTY	PART NUMBER
1	1	drum
2	1	bottom plate
3	1	perforated plate
4	1	shaft
5	2	bearing
6	2	stand
7	4	bearing bolt
8	2	cover
9	2	handle
10	4	pipe
11	2	pipe
12	2	valve seal
13	2	valva
14	2	thermometer
15	1	angle bar
16	2	bolt

Fig. 5: An exploded view of the par boiler.

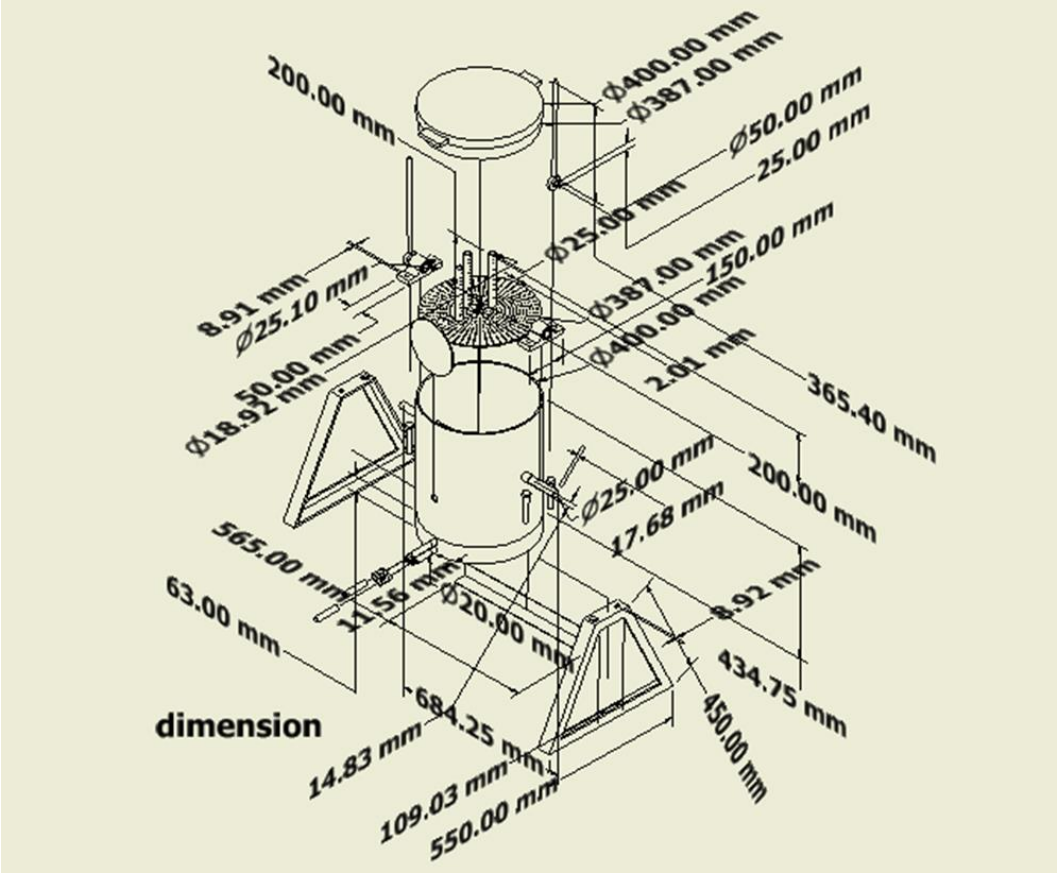

Fig. 6: Details drawing of the constructed par boiler.

5. References

[1] Hawthorn A.M 1981: Design and construction of an improved rice parboiling machine, Journal of Engineering and Environmental Technology Vol. (3).2007. 1-6.

[2] Khurmi R.S and Gupter J.K 2003: Thermal Engineering Published by S. Chand and company Ltd. 7361. Sam Nagar, New Delhi-110055.

[3] Ojha T.P and Michael A.M 2005: Principles of Agricultural Engineering Volume 1, Fift Edition By Jane brothers 750-752.

[4] Ryder G.D (1982):Strength of Materials by Macmillan Press Limited, London. Page 25

[5] Sahay K.M et'al 2007: Revised Edition of Unit Operation of Agricultural Processing. By Vikas Publishing House PVT Ltd 2001. 240-251.

[6] Sahay K.M. and Singh K.K 2003: Unit Operation of Agricultural Processing, Third Edition by Vikas Publishing House PVT Ltd, 2001. 200-300.

[7] Teri 2001: The Energy Resource Institute, January 2001. Bangladesh Rice Research Institute 2.